e badges

e-badges.net
+44 1780 740 075
info@e-badges.net

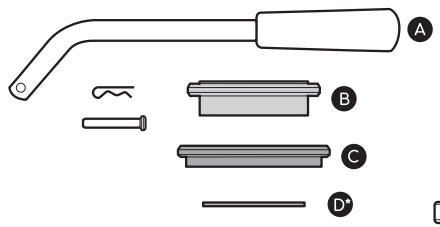

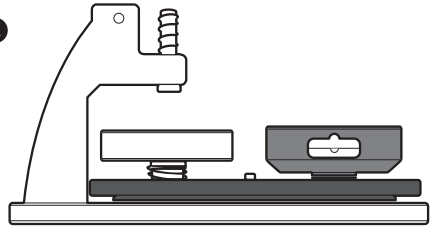

*D 45mm and 58mm sizes require metal spacer in all products except keyrings.

Quick setup

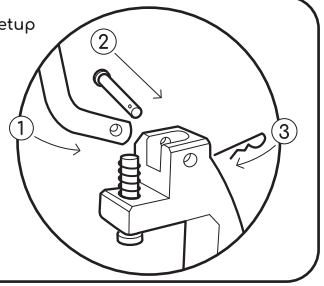

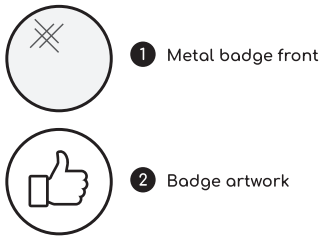

1.

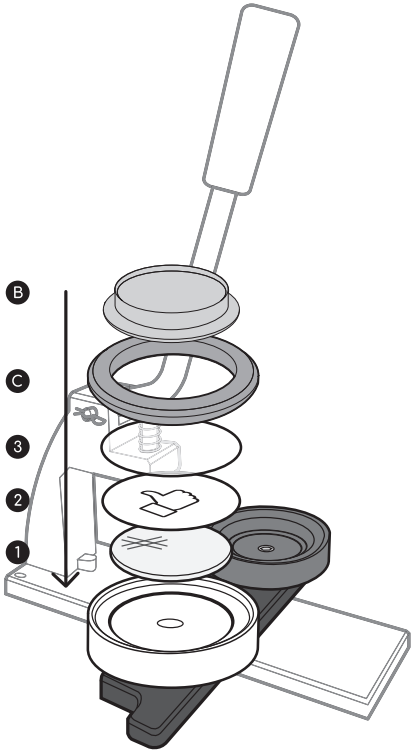

2.

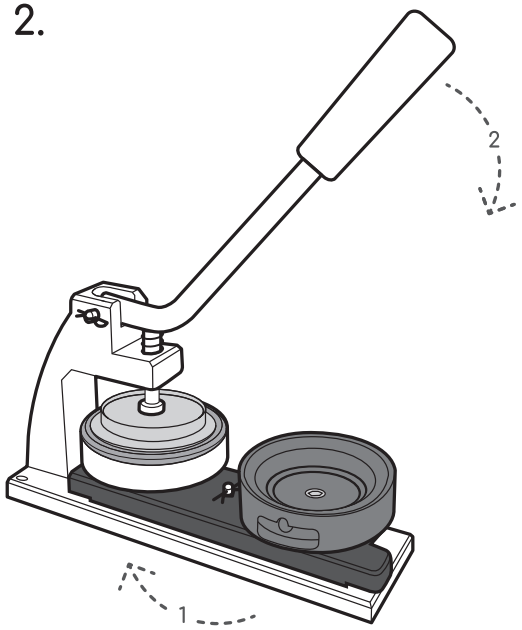

3.

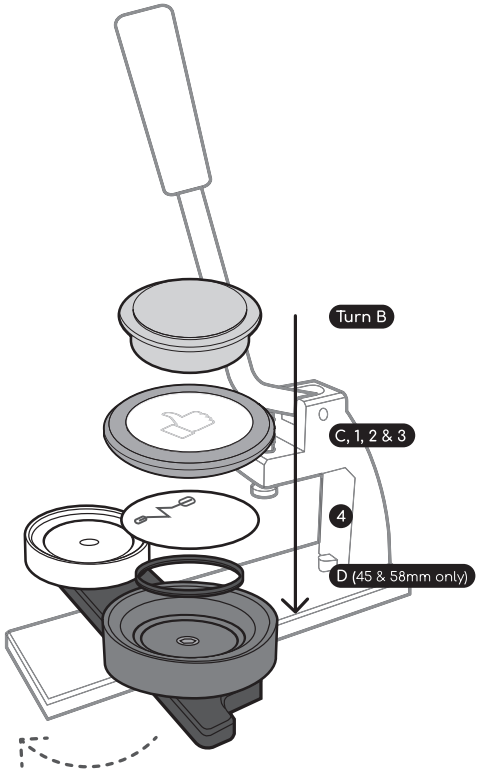

4.

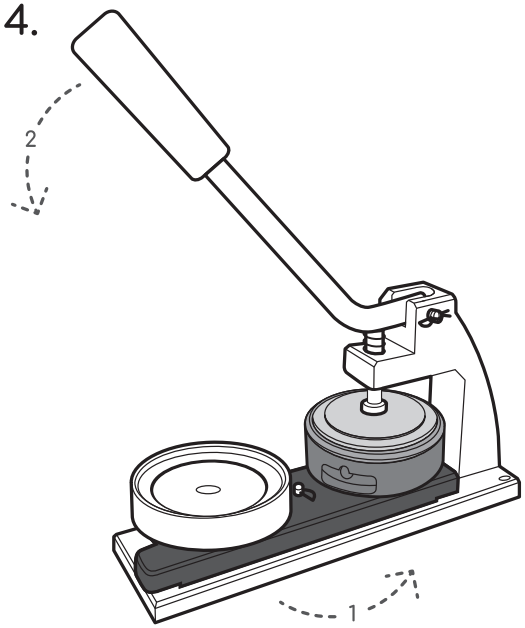

5.

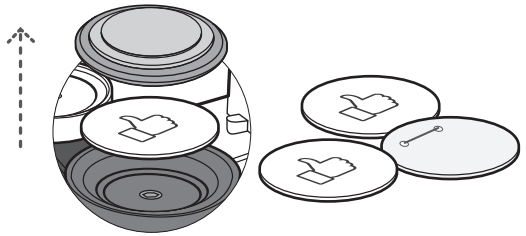

www.e-badges.net/make-badge-video

ES www.chapa-shop.com | IT www.awservice.com | BE and NL www.buttonsmaken.nl | DK www.brroset.dk | DE www.buttonmaschine-und-rohlinge.de
EE, LV and LT www.bestsub.lv | FR www.e-badges.net/fr | HR www.bedzomat.com.hr | IE www.mrsportsgift.com | PT www.fabriprint.pt | SE www.pins.se